E SERIES

ELECTRIC BOOM LIFTS

JLG reachingout™

Performance

Platform Height		
E300AJP	29 ft 5 in.	8.96 m
E400AJPN	40 ft	12.19 m
E450AJ	45 ft	13.72 m
Horizontal Outreach		
E300AJP	20 ft 1 in.	6.12 m
E400AJPN	22 ft 5 in.	6.83 m
E450AJ	23 ft 9 in.	7.24 m
Up and Over Height		
E300AJP	13 ft 2 in.	4.01 m
E400AJPN	21 ft 6 in.	6.55 m
E450AJ	25 ft 3 in.	7.7 m
Swing		
E300AJP	350° Non-continuous	
E400AJPN/E450AJ	360° Non-continuous	
Platform Capacity	500 lb	227 kg
Platform Rotator	180° Hydraulic	
Weight		
E300AJP	15,705 lb	7,123 kg
E400AJPN	14,900 lb	6,759 kg
E450AJ	14,400 lb	6,532 kg
Ground Bearing Pressure		
E300AJP	170 psi	11.95 kg/cm^2
E400AJPN	185 psi	13 kg/cm^2
E450AJ	110 psi	7.6 kg/cm^2
Max Drive Speed		
E300AJP	4.5 mph	7.2 km/h
E400AJPN	4.5 mph	7.2 km/h
E450AJ	4.5 mph	7.2 km/h
Gradeability		
E300AJP	25%	
E400AJPN	30%	
E450AJ	30%	
Turning Radius (inside)		
E300AJP	5 ft	1.52 m
E400AJPN	2 ft 10 in.	.86 m
E450AJ	2 ft	.61 m
Turning Radius (outside)		
E300AJP	10 ft 2 in.	3.1 m
E400AJPN	10 ft 4 in.	3.15 m
E450AJ	10 ft 4 in.	3.15 m

Standard Specifications

Power Source

Electrical System	48V DC
Batteries	8 x 6V, 370 amp-hr (305 amp-hr on E300)
Drive Motors	Dual Electric Traction—Brushless AC

Hydraulic System

• E300AJP	2.1 gal.	7.95 L
• E400AJPN	4 gal.	15.14 L
• E450AJ	4 gal.	15.14 L
• Motor/Pump	Permanent Magnet Motor/Gear Pump	

Tires

• E300AJP	25 x 7 x 12 Solid Non-marking
• E400AJPN (front)	22 x 6 x 17.5 Solid Non-marking
• E400AJPN (rear)	25 x 7 x 12 Solid Non-marking
• E450AJ	240/55-17.5 Foam Filled

Standard Features

- Automatic Traction Control (ATC)
- Side Entry Platform
- 180 Degree Hydraulic Platform Rotator
- 110V-AC Receptacle on Platform
- Tilt Light and Alarm
- Hourmeter
- Battery Condition Indicator
- Lifting/Tie Down Lugs
- Horn
- All Motion Alarm
- Eight 6V 370 amp-hr Deep Cycle Batteries
- Brushless AC Motors
- Load Sensing System
- SkyGuard Skyline™

Accessories & Options

- Inward Self-closing Swing Gate
- SkySense™ (E450AJ Only)
- Flashing Amber Beacon
- Operator Tool Tray

Additional accessories and options available via JLG Aftermarket.

E SERIES

ELECTRIC BOOM LIFTS

Dimensions

All dimensions are approximate.

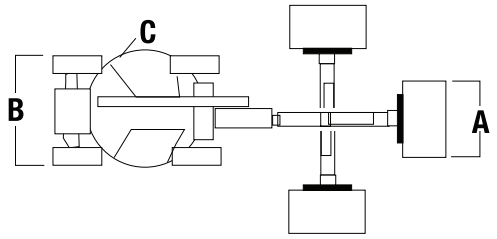

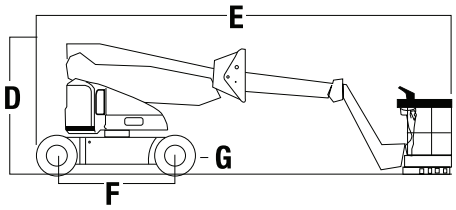

A.Platform Size

E300AJP	30 x 48 in.	0.76 x 1.22 m
E400AJPN	30 x 48 in.	0.76 x 1.22 m
E450AJ	30 x 60 in.	0.76 x 1.52 m

B. Overall Width

E300AJP	4 ft	1.22 m
E400AJPN	4 ft 11 in.	1.5 m
E450AJ	5 ft 9 in.	1.75 m

C. Tailswing

E300AJP	Zero	
E400AJPN	4 in.	10 cm
E450AJ	Zero	

D. Stowed Height

E300AJP	6 ft 7 in.	2.01 m
E400AJPN	6 ft 5.75 in.	1.97 m
E450AJ	6 ft 7 in.	2.01 m

E. Stowed Length

E300AJP	18 ft 10 in.	5.74 m
E400AJPN	22 ft	6.71 m
E450AJ	21 ft 2 in.	6.45 m

F. Wheelbase

E300AJP	5 ft 5 in.	1.65 m
E400AJPN	6 ft 7 in.	2.01 m
E450AJ	6 ft 7 in.	2.01 m

G. Ground Clearance

E300AJP	4 in.	10 cm
E400AJPN	5 in.	13 cm
E450AJ	8 in.	20 cm

Reach Diagrams

E300

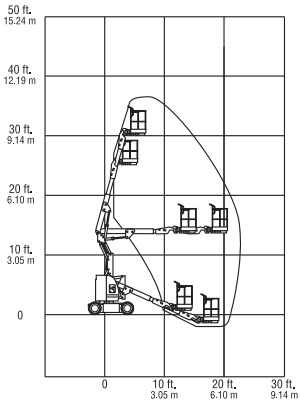

E400

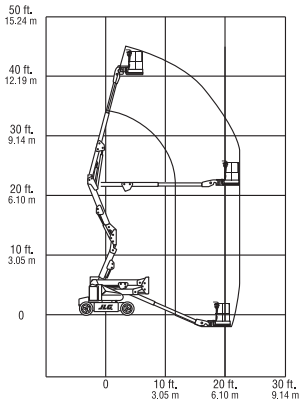

E450

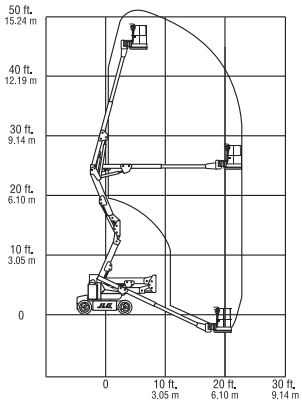

The JLG "1 & 5" Warranty

We provide coverage for one (1) full year, and cover all specified major structural components for five (5) years. Due to continuous product improvements, we reserve the right to make specification and/or equipment changes without prior notification. This machine meets or exceeds applicable ANSI and CSA requirements based on machine configuration as originally manufactured for intended applications. Please reference the serial number plate on the machine for additional information.

Part No.: 3131119
R1220_A92.20
Printed in USA

JLG Industries, Inc.
1 JLG Drive
McConnellsburg, PA 17233-9533
Telephone 717-485-5161
Toll-free in US 877-JLG-LIFT
Fax 717-485-6417
www.jlg.com

An Oshkosh Corporation Company